IMPORTANT

CUTTING OPENING

* Only a professional stone fabricator is qualified to perform this installation.
* Do not cut the sink opening with traditional saw cut method.
* Carefully measure the inside width and length of the bowl and then add 1/4" to each. This is the dimension of the opening to be cut on the counter top.

SILICONE CAULKING

* MUST use 100% silicone for this installation.
* Silicone color should match counter top color as close as possible.
* If there is NO matching color to the counter top, use CLEAR silicone.
* NEVER use "SILVER" silicone.
* NEVER perform this procedure outdoor and under sunlight.
* If performed under an extremely hot and dry climate, the caulking of the sink frame should performed by two people at the same time.

Copyright 2007-2011 Mila International, Inc. www.mila-international.com

Mila International DUAL-MOUNT Installation Instructions
UNDER-MOUNT

INTRODUCTION

Thank you for choosing Mila International, Inc. DUAL-MOUNT sink.

Before you begin:
- Please carefully read these instructions.
- Unpack and inspect the sink carefully. Do not install the sink if it is damaged.
- Save all original packaging and receipts.
- Check and follow all local plumbing code.

Recommended tools and materials

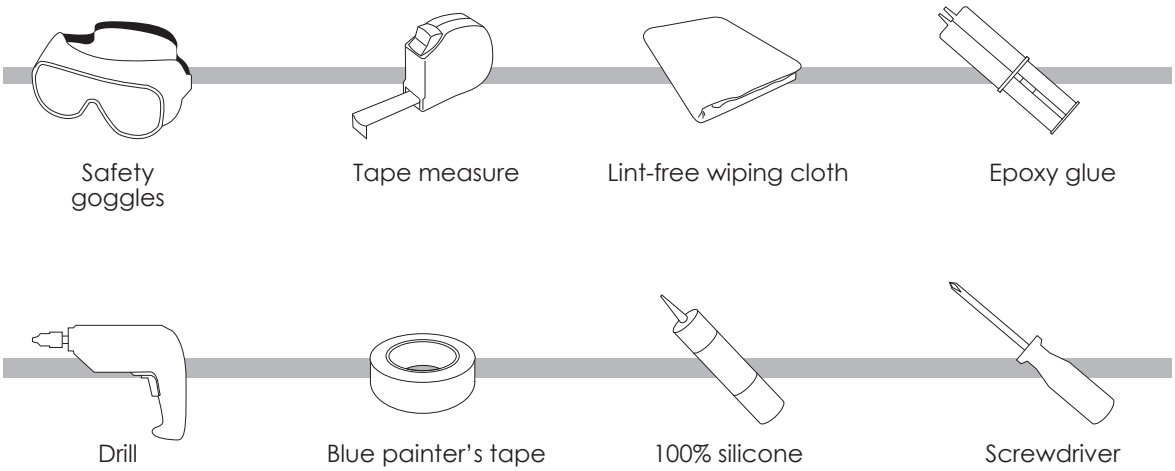

Copyright 2007-2011 Mila International, Inc. www.mila-international.com

Step 1: CUTTING OPENING

Carefully measure the perimeter of the sink frame, then add 1/8" to all four sides. This is the dimension of the opening to be cut in the counter top.

IMPORTANT *** ONLY A PROFESSIONAL STONE FABRICATOR IS QUALIFIED TO PERFORM THIS INSTALLATION.**

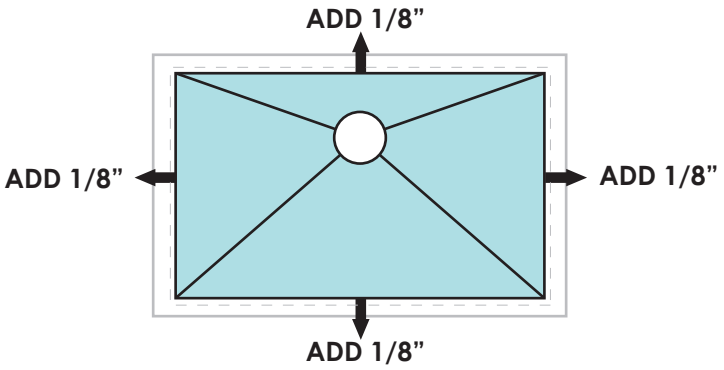

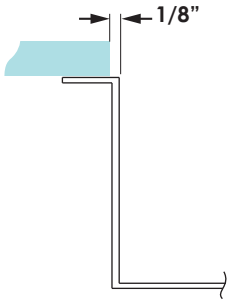

Step 2: CLEANING

Gently clean the counter top and the sink frame to remove all dirt, oil and contaminants from the surfaces. Do not use any abrasive cleaning solutions that may damage the counter top surface and sink frame.

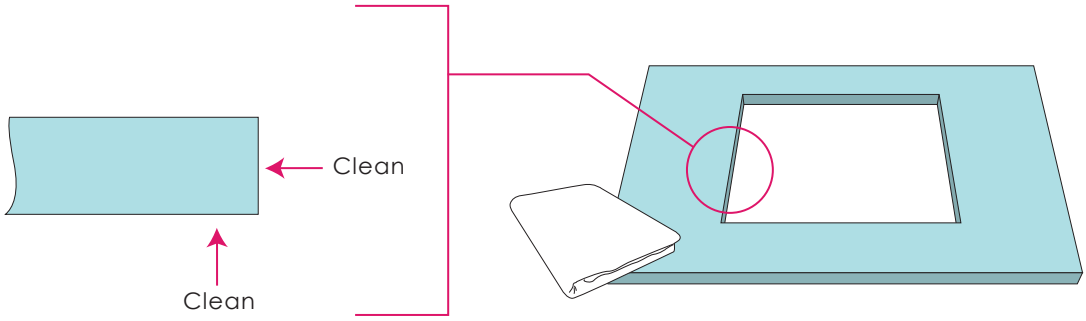

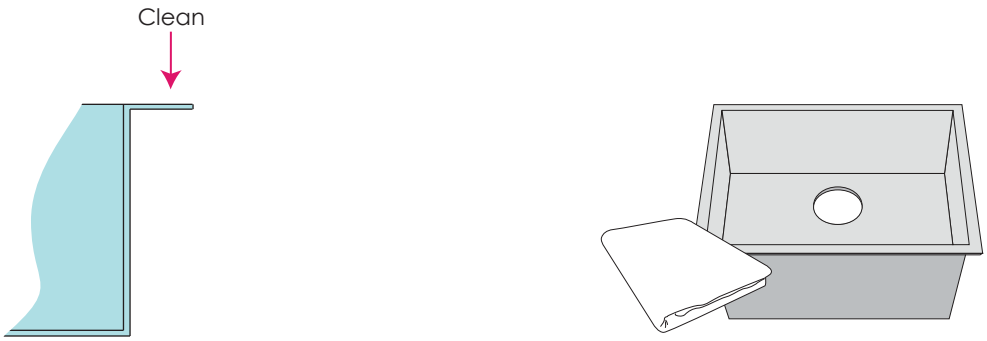

Copyright 2007-2011 Mila International, Inc. www.mila-international.com

Step 3: INSERTING MOUNTING HARDWARE

To secure the sink in place you will need to insert anchors into the underside of the counter top. To do this please follow the instructions below carefully.

a) Align your sink up properly ensuring it is square to the opening and mark the position of the holes. They should be offset from the edge of the sink frame by approximately 1" with a spacing of 6 - 8" between holes.

b) Drill the relevant size holes, for the anchors you have with your under-mounting hardware, in the underside of your counter top. Be careful not to drill through the full thickness of the counter top.

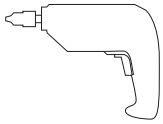

Underside of Sink and Counter top

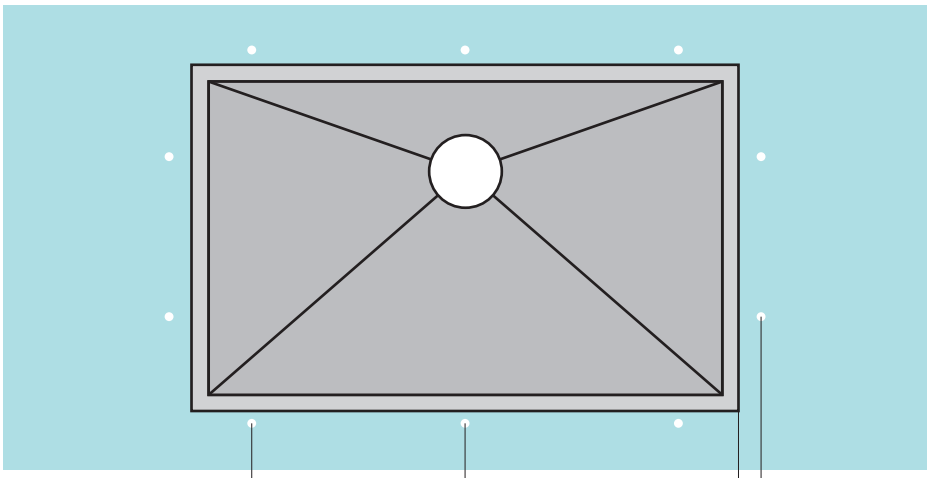

6"-8" Spacing

Approx 1" from edge of sink frame

c) Use epoxy to secure the anchors in place in the holes you just drilled in the underside of the counter top.

d) Allow the epoxy to cure for the recommended time which will be detailed on the epoxy packaging before continuing.

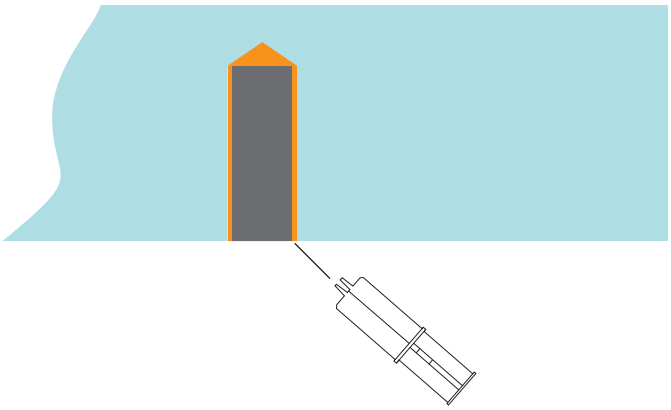

Use epoxy to secure all the anchors into the counter top

Allow epoxy to cure

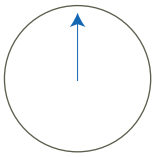

Copyright 2007-2011 Mila International, Inc. www.mila-international.com

Step 4: ATTACHING BRACKETS

Loosely attach all of the mounting brackets to the anchors so they are ready to hold the sink in place.

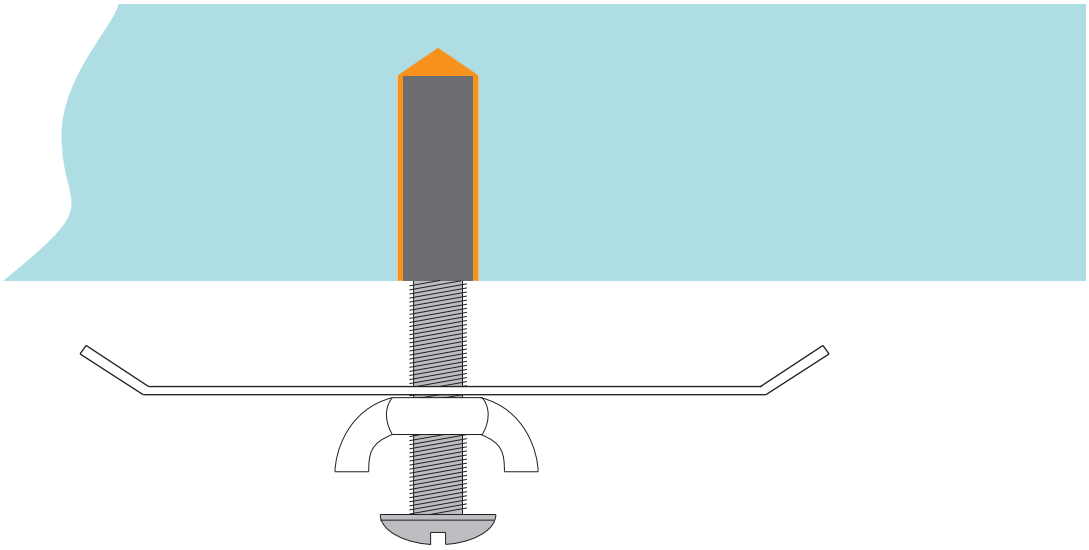

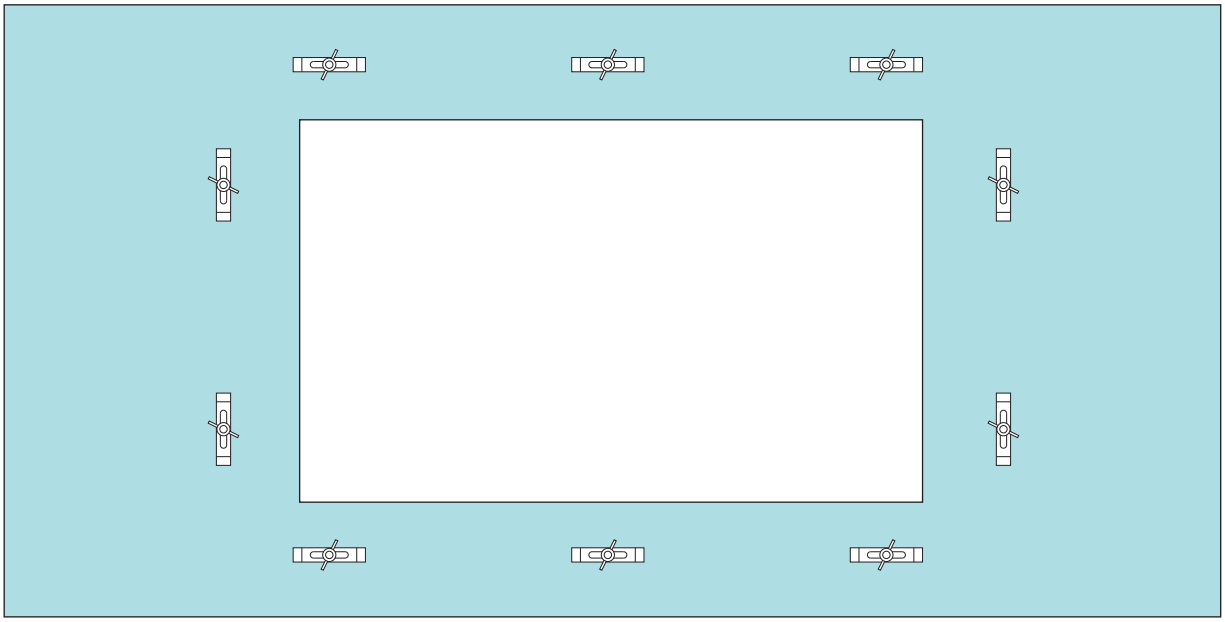

Copyright 2007-2011 Mila International, Inc. www.mila-international.com

Step 5: SILICONE CAULKING

Butter coat the area of the sink frame that will come into contact with the counter top with silicone.

Make sure that it is evenly applied and does not extend further than 3" from the edge of the rim for a step-down aesthetic and 1 - 5/8" for a traditional undermount aesthetic.

*Please follow the diagrams below.

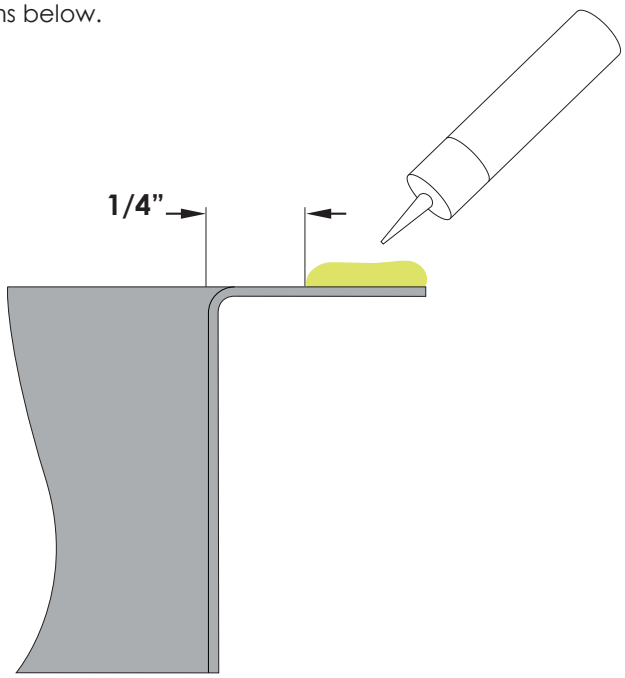

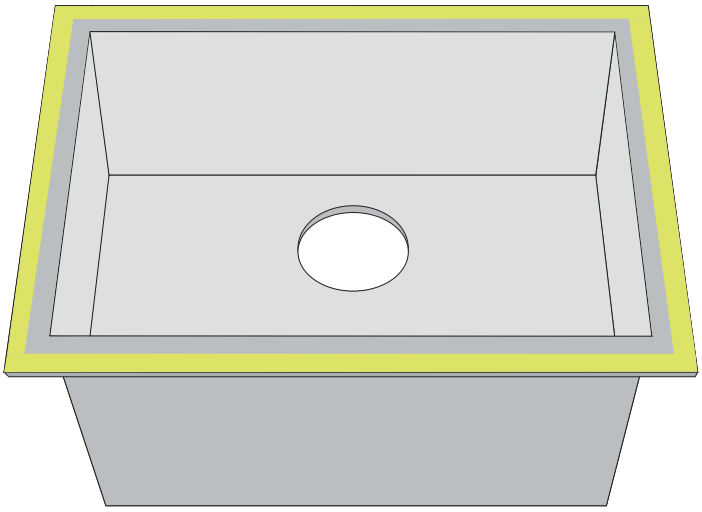

Copyright 2007-2011 Mila International, Inc. www.mila-international.com

Step 6: INSERTING THE SINK

Offer up the sink to the underside of the counter top and turn all of the mounting hardware brackets 90degrees so they are holding the sink in place. Ensure the sink is aligned properly and then tighten all of the butterfly nuts to secure the sink in place.

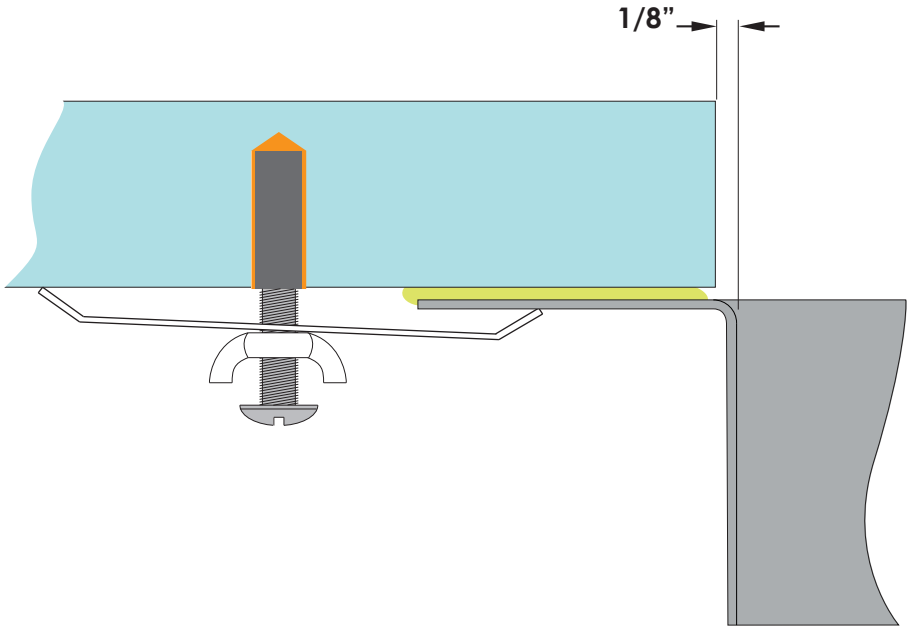

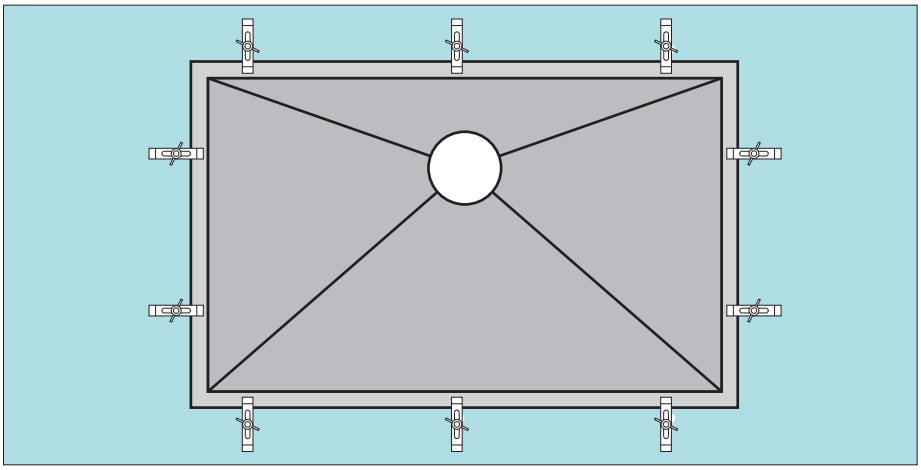

*** Once Step 6 is completed, proceed immediately to Step 7.**

Copyright 2007-2011 Mila International, Inc. www.mila-international.com

Step 7: CLEANING SILICONE

Using a **lint-free wiping cloth**, immediately wipe off excess silicone in the indicated order.

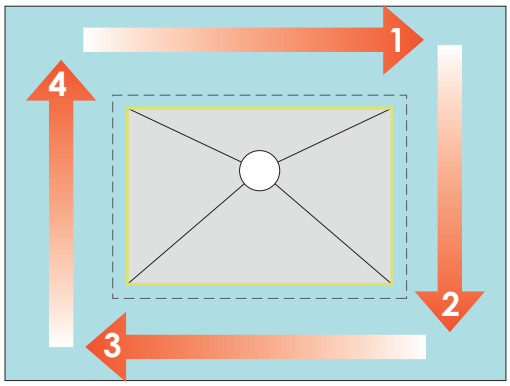

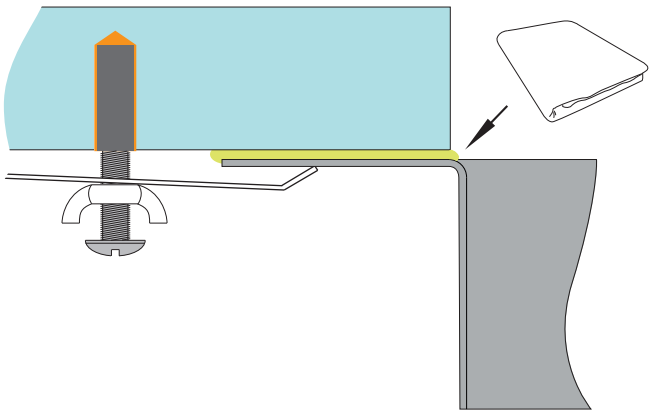

Allow 24hours for the silicone to set before using the sink.

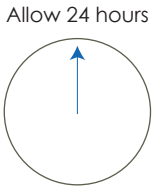

The installation is now complete. Please enjoy your sink!

MILA INTERNATIONAL MAKES NO WARRANTIES, EXPRESSED OR IMPLIED, INCLUDING BUT NOT LIMITED TO ANY WARRANTY OF MERCHANTABILITY OR OF FITNESS FOR A PARTICULAR PURPOSE, AS TO THE INFORMATION CONTAINED HERE IN OR THE PRODUCTS DESCRIBED HEREIN.

Copyright 2007-2011 Mila International, Inc. www.mila-international.com